YAMAHA

FS-1 '87

2RT-SE1

SERVICE INFORMATION

FOREWORD

This Service Information has been prepared to introduce new service and data for the FS-1. For complete service information procedures it is necessary to use this publication together with the following microfiche service manual.

FS-1 SERVICE MANUAL: 2RT-ME1

FS-1

1st Edition, April 1987

NOTICE

This manual was written by the Yamaha Motor Company primarily for use by Yamaha dealers and their qualified mechanics. It is not possible to put an entire mechanic's education into one manual, so it is assumed that persons using this book to perform maintenance and repairs on Yamaha motorcycles have a basic understanding of the mechanical concepts and procedures inherent in motorcycle repair technology. Without such knowledge, attempted repairs or service to this model may render it unfit to use and/or unsafe.

Yamaha Motor Company, Ltd. is continually striving to improve all models manufactured by Yamaha. Modifications and significant changes in specifications or procedures will be forwarded to all Authorized Yamaha dealers and will, where applicable, appear in future editions of this manual.

TECHNICAL PUBLICATIONS
SERVICE DIVISION
MOTORCYCLE OPERATIONS
YAMAHA MOTOR CO., LTD.

HOW TO USE THIS MANUAL

PARTICULARLY IMPORTANT INFORMATION

This material is distinguished by the following notation.

NOTE: A NOTE provides key information to make procedures easier or clearer.

CAUTION: A CAUTION indicates special procedures that must be followed to avoid damage to the motorcycle.

WARNING: A WARNING indicates special procedures that must be followed to avoid injury to a motorcycle operator or person inspecting or repairing the motorcycle.

MANUAL FORMAT

All of the procedures in this manual are organized in a sequential, step-by-step format. The information has been compiled to provide the mechanic with an easy to read, handy reference that contains comprehensive explanations of all disassembly, repair, assembly, and inspection operations.
In this revised format, the condition of a faulty component will precede an arrow symbol and the course of action required will follow the symbol, e.g.,

- Bearings
  Pitting/Damage→Replace.

EXPLODED DIAGRAM

Each chapter provides exploded diagrams before each disassembly section for ease in identifying correct disassembly and assembly procedures.

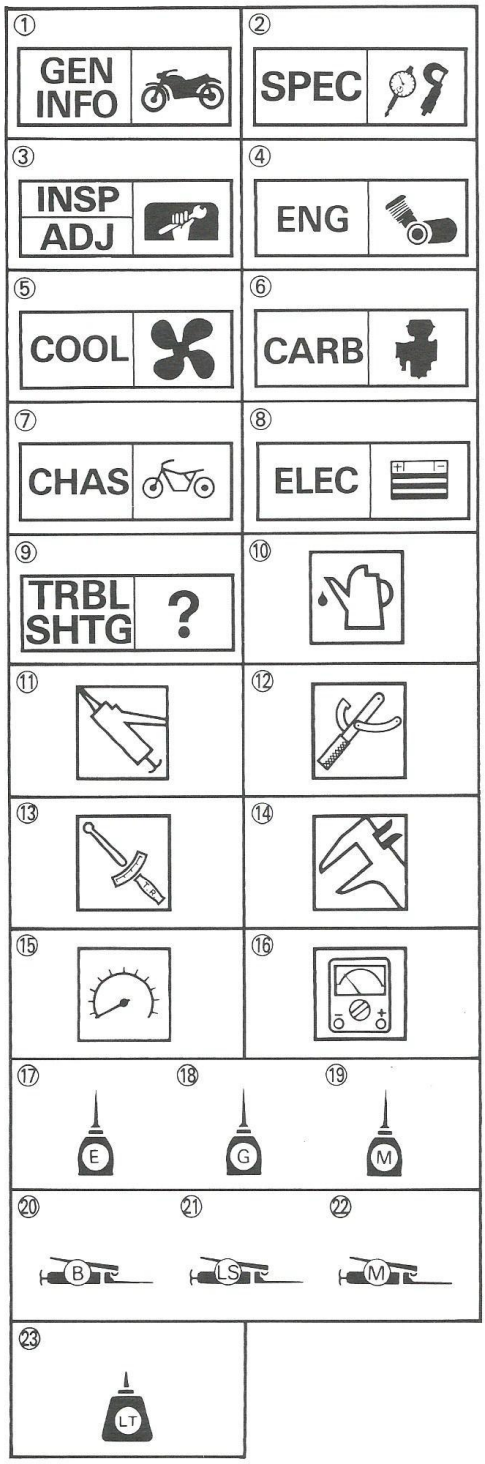

ILLUSTRATED SYMBOLS (Refer to the illustration)

Illustrated symbols ① to ⑨ are designed as thumb tabs to indicate the chapter's number and content.

① General information
② Specifications
③ Periodic inspection and adjustment
④ Engine
⑤ Cooling system
⑥ Carburetion
⑦ Chassis
⑧ Electrical
⑨ Troubleshooting

Illustrated symbols ⑩ to ⑯ are used to identify the specifications appearing in the text.

⑩ Filling fluid
⑪ Lubricant
⑫ Special tool
⑬ Tightening
⑭ Wear limit, clearance
⑮ Engine speed
⑯ Ω, V, A

Illustrated symbols ⑰ to ㉓ in the exploded diagram indicate grade of lubricant and location of lubrication point.

⑰ Apply engine oil
⑱ Apply gear oil
⑲ Apply molybdenum disulfide oil
⑳ Apply wheel bearing grease
㉑ Apply lightweight lithium-soap base grease
㉒ Apply molybdenum disulfide grease
㉓ Apply locking agent (LOCTITE®)

CONTENTS

GENERAL INFORMATION 1
MOTORCYCLE IDENTIFICATION 1

PERIODIC INSPECTION AND ADJUSTMENT 2
INTRODUCTION 2
PERIODIC MAINTENANCE 2
LUBRICATION INTERVALS 3

EXPLODED DIAGRAM 4
CRANKSHAFT/PISTON 4
TRANSMISSION 5
ROTARY VALVE 6
CLUTCH 7
CYLINDER HEAD/CYLINDER 8
CARBURETOR 9
FRONT WHEEL 10
REAR WHEEL 11
FRONT FORK 12
STEERING HEAD AND HANDLEBAR 13
REAR SHOCK ABSORBER AND SWINGARM 14
ELECTRICAL COMPONENTS 15
CABLE ROUTING 17

SPECIFICATIONS 21
GENERAL SPECIFICATIONS 21
MAINTENANCE SPECIFICATIONS 24
GENERAL TORQUE SPECIFICATIONS 33
DEFINITION OF UNITS 33
LUBRICATION POINTS AND LUBRICANT TYPE 34

FS-1 WIRING DIAGRAM

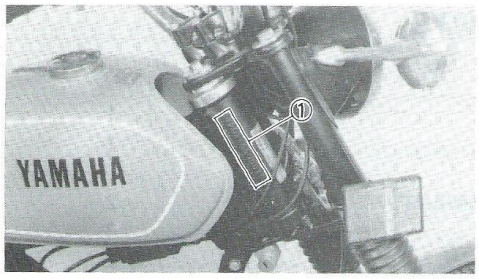

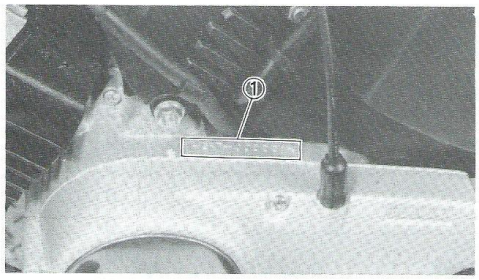

GENERAL INFORMATION

MOTORCYCLE IDENTIFICATION

FRAME SERIAL NUMBER

The frame serial number ① is stamped into the right side of the steering head pipe.

ENGINE SERIAL NUMBER

The engine serial number ① is stamped into the elevated part of the left rear section of the engine.

NOTE:

The first three digits of these numbers are for model identifications; the remaining digits are the unit production number.

Starting Serial Number:
2RU-000101 (For Holland)
2RT-000101 (For Belgium)
3F6-105101 (For England)

NOTE:

Designs and specifications are subject to change without notice.

(For Belgium & England)

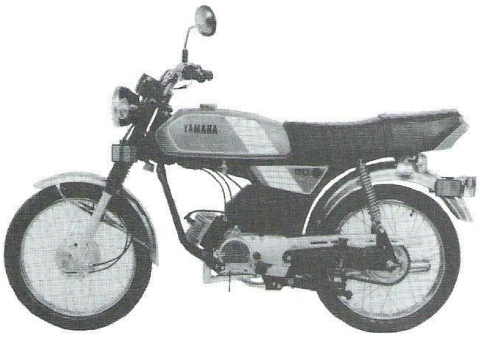

(For Holland)

PERIODIC INSPECTION AND ADJUSTMENT

INTRODUCTION

This chapter includes all information necessary to perform recommended inspections and adjustments. These preventive maintenance procedures, if followed, will ensure more reliable vehicle operation and a longer service life. The need for costly overhaul work will be greatly reduced. This information applies to vehicles already in service as well as new vehicles that are being prepared for sale. All service technicians should be familiar with this entire chapter.

PERIODIC MAINTENANCE

Unit: km (mi)

Item	Remarks	Initial			Thereafter every	
		500 (300)	1,500 (1,000)	3,000 (2,000)	3,000 (2,000)	6,000 (4,000)
*Cylinder head/Exhaust pipe	Decarbonize			○		○
Spark plug	Inspect/Clean or replace as required	○	○	○	○	
Air filter	Clean/Replace as required		○	○	○	
*Carburetor	Check operation/Adjust as required		○	○	○	
*Brake system (Complete)	Check/Adjust as required — Repair as required	○	○	○	○	
*Wheels and tires	Check pressure/Wheel/Balance/Runout	○	○		○	
Fuel cock	Clean/Flush tank as required			○		○
*Autolube pump	Check/Adjust/Air bleeding	○	○	○		○
*Battery	Top-up/Check specific gravity and breather pipe	○	○	○	○	
*Ignition timing	Adjust/Clean or replace as required	○				○
Lights/Signals	Check operation/Replace as required	○		○	○	
Fittings/Fasteners	Tighten before each trip and/or.....	○			○	
Drive chain	Check chain slack/Alignment	Every 500 (300)				
Clutch	Check/Adjust	○	○		○	
Suspension system	Check/Tighten	○			○	

*It is recommended that these item be serviced by a Yamaha dealer.

LUBRICATION INTERVALS

Unit: km (mi)

Item	Remarks	Type (Recommended lubricants)	Initial			Thereafter every	
			500 (300)	1,500 (1,000)	3,000 (2,000)	3,000 (2,000)	6,000 (4,000)
Transmission oil	Replace/Warm engine before draining	SAE 10W/30, type "SE" motor oil	○		○	○	
Control/Meter cables	Apply lightly	SAE 10W30 motor oil		○	○	○	
Throttle grip/ Housing	Apply lightly	Lithium base grease	○		○	○	
*Steering bearings	Inspect thoroughly/ Pack moderately	Medium-weight wheel bearing grease			Check		○
*Speedometer gear housing	Inspect thoroughly/ Pack	Lithium base grease			○		○
Rear arm pivot shaft	Apply grease fully	Medium-weight wheel bearing grease			○		○
*Wheel bearings	Do not over-pack	Medium-weight wheel bearing grease			○		○
Drive chain	Clean and lube	SAE 10W/30 type "SE" motor oil	Every 500 (300)				
Brake pedal shaft	Apply lightly	Lithium base grease		○	○	○	
Stand shaft pivot	Apply lightly	Lithium base grease					○
*Point cam lubrication wick	Apply very lightly	Light-weight machine oil			○	○	

*It is recommended that these items be serviced by a Yamaha dealer.

EXPLODED DIAGRAM

CRANKSHAFT/PISTON

① Flange nut
② Conical spring washer
③ Primary drive gear
④ Bearing
⑤ Crank (Right)
⑥ Crank pin
⑦ Big end bearing
⑧ Connecting rod
⑨ Crank (Left)
⑩ Woodruff key
⑪ Piston pin clip
⑫ Piston ring set
⑬ Piston
⑭ Piston pin
⑮ Small end bearing
⑯ Bearing
⑰ Oil seal

A	PISTON TO CYLINDER CLEARANCE: 0.035 ~ 0.040 mm (0.0014 ~ 0.0016 in)
B	END GAP (INSTALLED): Top ring 0.15 ~ 0.35 mm (0.006 ~ 0.014 in) 2nd ring 0.15 ~ 0.35 mm (0.006 ~ 0.014 in)

C	CRANKSHAFT:
A:	37.90 ~ 37.95 mm (1.492 ~ 1.494 in)
C:	0.03 mm (0.0012 in)
D:	0.2 ~ 0.7 mm (0.008 ~ 0.028 in)
F:	0.8 ~ 1.0 mm (0.03 ~ 0.04 in)

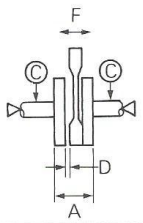

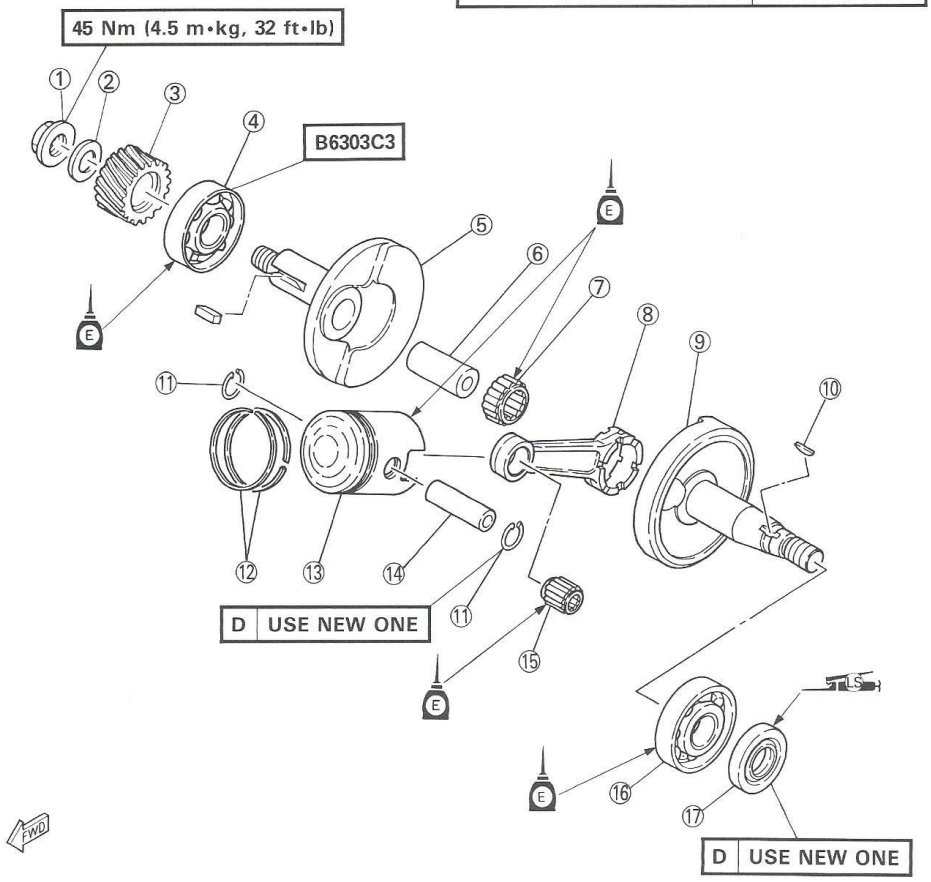

TRANSMISSION

① Circlip
② Plain washer
③ 1st wheel gear (40T)
④ 3rd wheel gear (30T)
⑤ 2nd wheel gear (34T)
⑥ 4th wheel gear (27T)
⑦ Drive axle
⑧ Bearing
⑨ Oil seal
⑩ Drive sprocket
⑪ Bearing stopper plate
⑫ Bearing
⑬ Main axle
⑭ 3rd pinion gear
⑮ Circlip
⑯ 2nd pinion gear
⑰ 4th pinion gear
⑱ Circlip
⑲ Stopper lever assembly
⑳ Tension spring
㉑ Circlip
㉒ Guide bar 1
㉓ Shift fork 1
㉔ Straight pin
㉕ Shift cam assembly
㉖ Shift fork 2
㉗ Guide bar 2

C
NOTE:
Force fit the 4th wheel gear ⑥ over the drive axle ⑦ as far as its flange.

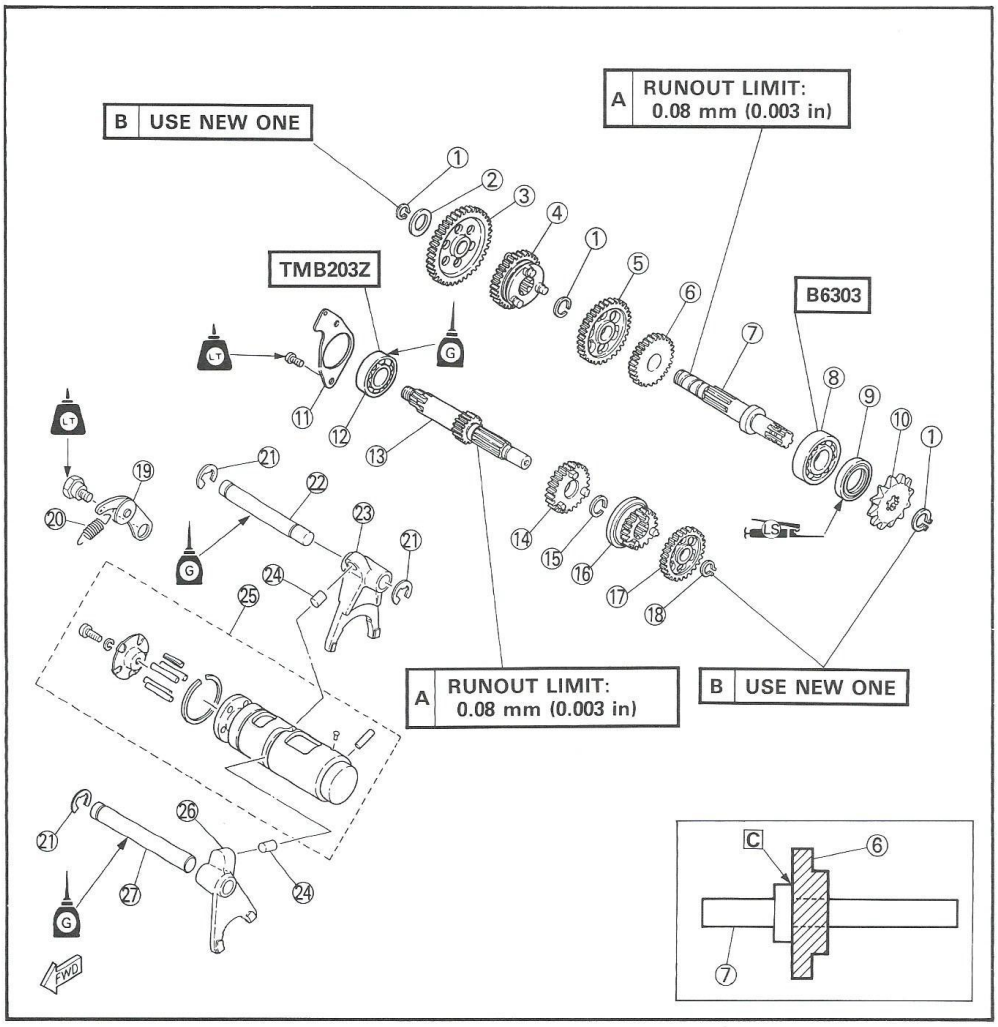

ROTARY VALVE

① Oil seal
② O-ring
③ O-ring
④ Rotary valve cover
⑤ Dowel pin
⑥ O-ring
⑦ Collar
⑧ Valve collar
⑨ Rotary valve
⑩ Pin

A
NOTE:
Insert the pin ⑩ in the crankshaft. Then install the crankshaft with the pin in line with the marking ⓐ and valve collar slit ⓑ.

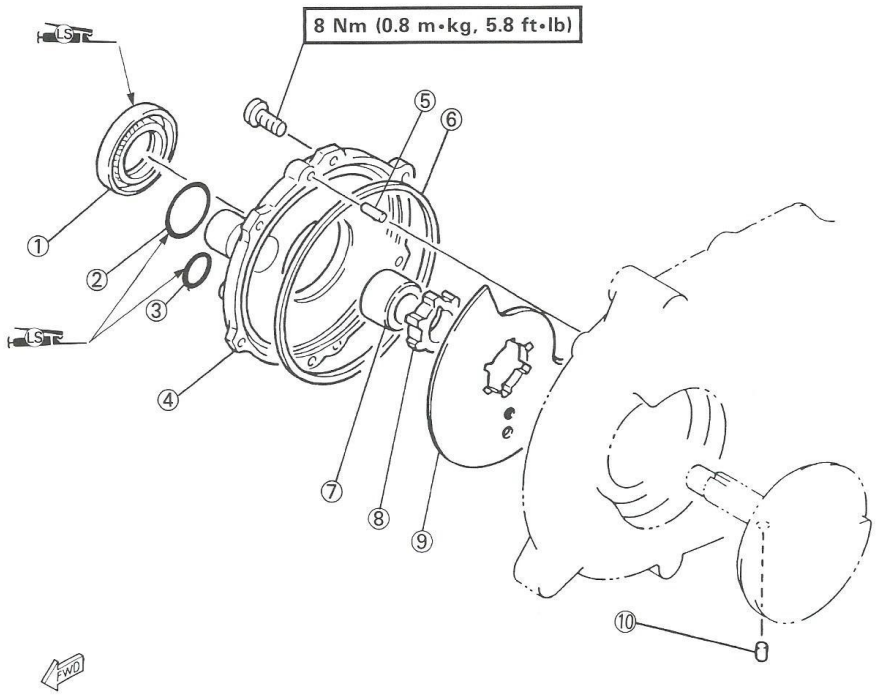

A ROTARY VALVE INSTALLATION

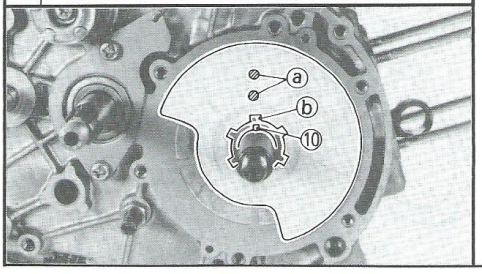

CLUTCH

① Clutch spring holding screw
② Clutch spring
③ Pressure plate
④ Push rod #1
⑤ Plain washer
⑥ Friction plate
⑦ Clutch plate
⑧ Clutch boss
⑨ Plain washer
⑩ Clutch housing
⑪ Collar
⑫ Plain washer
⑬ Ball
⑭ Push rod #2
⑮ Oil seal
⑯ Push lever
⑰ Oil seal
⑱ Ball
⑲ Push screw
⑳ Locknut
㉑ Adjusting screw
㉒ Conical spring washer
㉓ Primary drive gear
㉔ Straight key
㉕ Cap

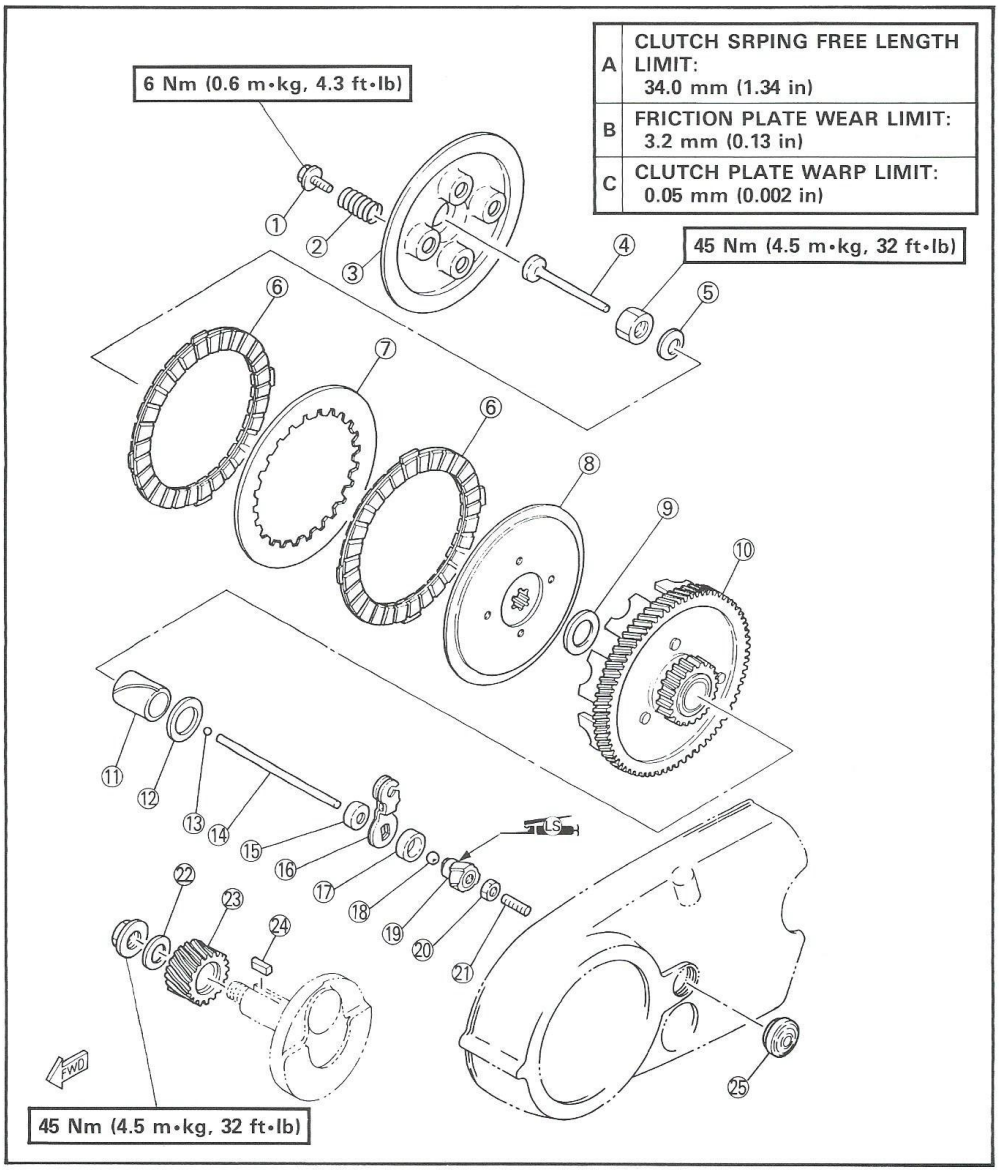

A	CLUTCH SRPING FREE LENGTH LIMIT: 34.0 mm (1.34 in)
B	FRICTION PLATE WEAR LIMIT: 3.2 mm (0.13 in)
C	CLUTCH PLATE WARP LIMIT: 0.05 mm (0.002 in)

CYLINDER HEAD/CYLINDER

① Spark plug
② Cylinder head
③ Gasket (Cylinder head)
④ Cylinder
⑤ Gasket (Cylinder)
⑥ Stud bolt

A	SPARK PLUG:
B	MANUFACTURER: NGK
C	TYPE: BR-6HS (Holland) BR-7HS (Belgium, England)
D	PLUG GAP: 0.6 ~ 0.7 mm (0.02 ~ 0.03 in)

E	CYLINDER HEAD WARPAGE LIMIT: 0.03 mm (0.0012 in)

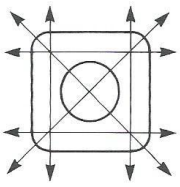

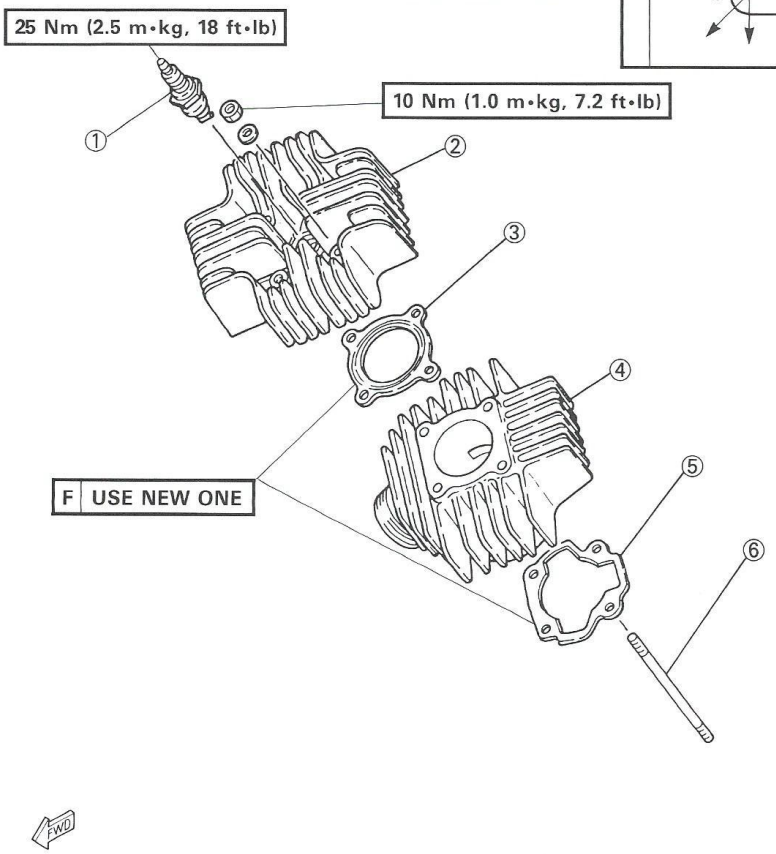

CARBURETOR

① Starter plunger
② Throttle stop screw
③ Throttle valve spring
④ Spring seat
⑤ Clip
⑥ Throttle valve
⑦ Jet needle
⑧ Valve seat assembly
⑨ Pilot air screw
⑩ Needle jet
⑪ Pilot jet
⑫ Main jet
⑬ Float
⑭ Gasket
⑮ O-ring
⑯ Drain screw
⑰ Overflow hose

SPECIFICATIONS

	BELGIUM AND ENGLAND	HOLLAND
MAIN JET (M.J.)	#150	#78
AIR JET (A.J.)	0.5	2.3
JET NEEDLE (J.N.)	3G9-3	3E11-4
NEEDLE JET (N.J.)	E-4	←
CUTAWAY (C.A.)	1.5	2.5
PILOT JET (P.J.)	#25	←
AIR SCREW (A.S.)	1 1/2~2	1~1 1/2
STARTER JET (G.S.)	#35	←
ENGINE IDLING SPEED	1,250~1,350 r/min	←

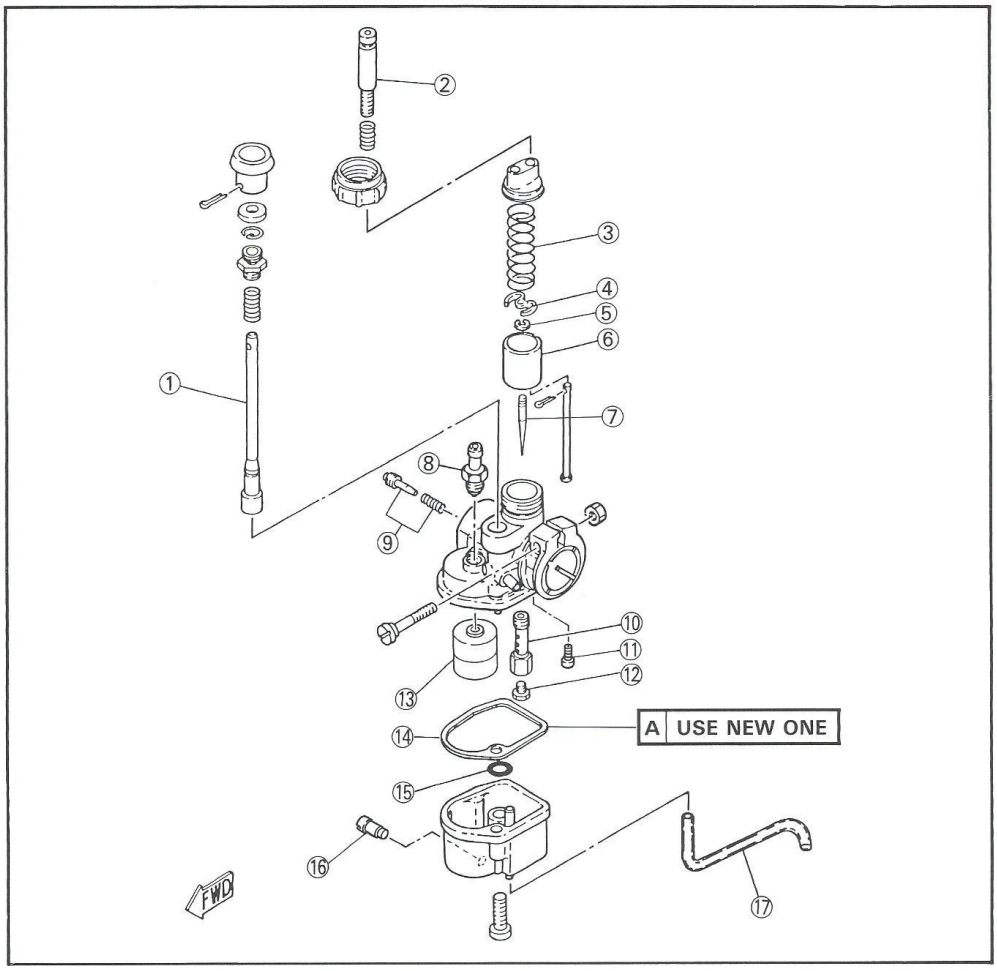

FRONT WHEEL

① Wheel axle
② Hub dust cover
③ Collar
④ Oil seal
⑤ Bearing
⑥ Spacer flange
⑦ Spacer
⑧ Spoke
⑨ Oil seal
⑩ Circlip
⑪ Plain washer
⑫ Meter clutch
⑬ Drive gear
⑭ Brake shoe comp
⑮ Brake camshaft
⑯ Camshaft lever
⑰ Cap
⑱ Brake shoe plate
⑲ Driven gear

BASIC WEIGHT: WITH OIL AND FULL FUEL TANK	81 kg (179 lb) 82 kg (181 lb) FOR ENGLAND
MAXIMUM LOAD*	241 kg (531 lb)
	COLD TIRE PRESSURE
FRONT	250 kpa (2.5 kg/cm^2, 36 psi)
REAR	250 kpa (2.5 kg/cm^2, 36 psi)

* Load is the total weight of cargo rider, passenger, and accessories.

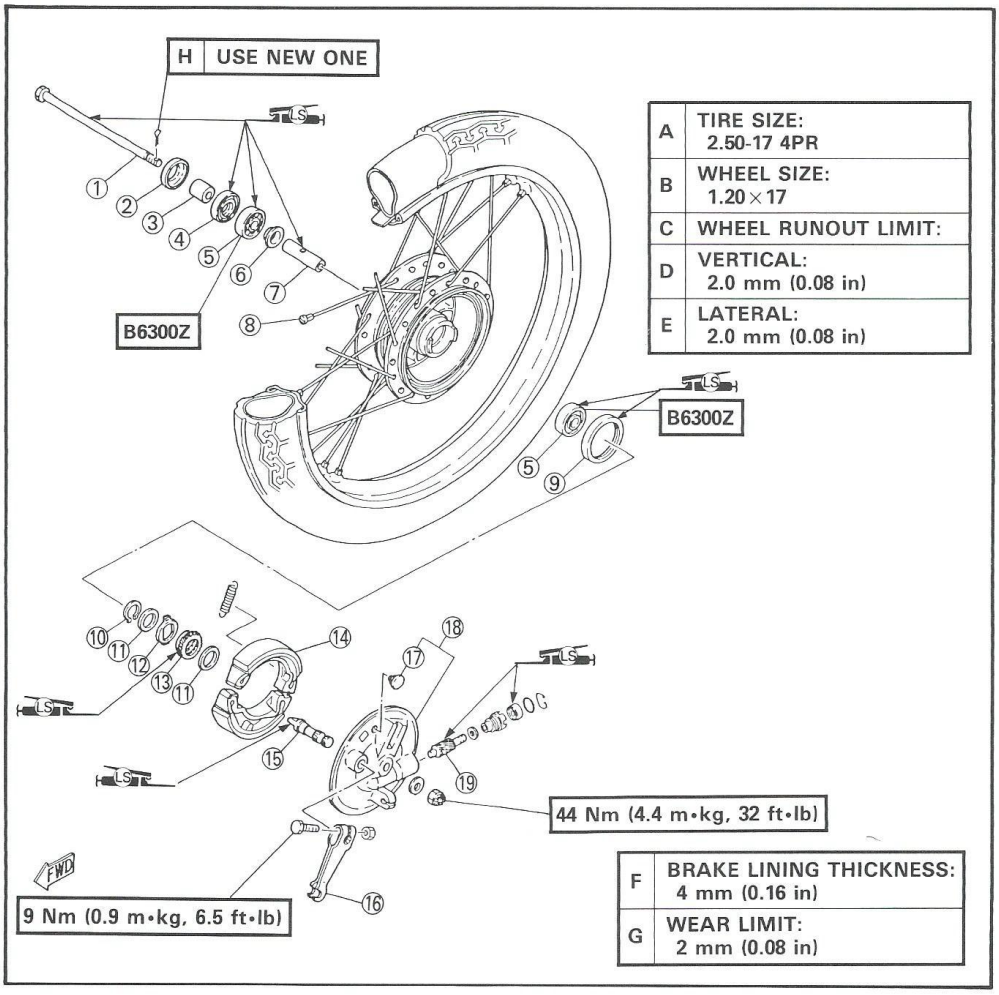

REAR WHEEL

① Wheel axle
② Chain puller
③ Spacer
④ Cap
⑤ Brake shoe plate
⑥ Camshaft lever
⑦ Bolt
⑧ Camshaft
⑨ Brake shoe lining
⑩ Oil seal
⑪ Bearing
⑫ Plain washer
⑬ Spacer
⑭ Oil seal
⑮ Collar
⑯ Tension bar

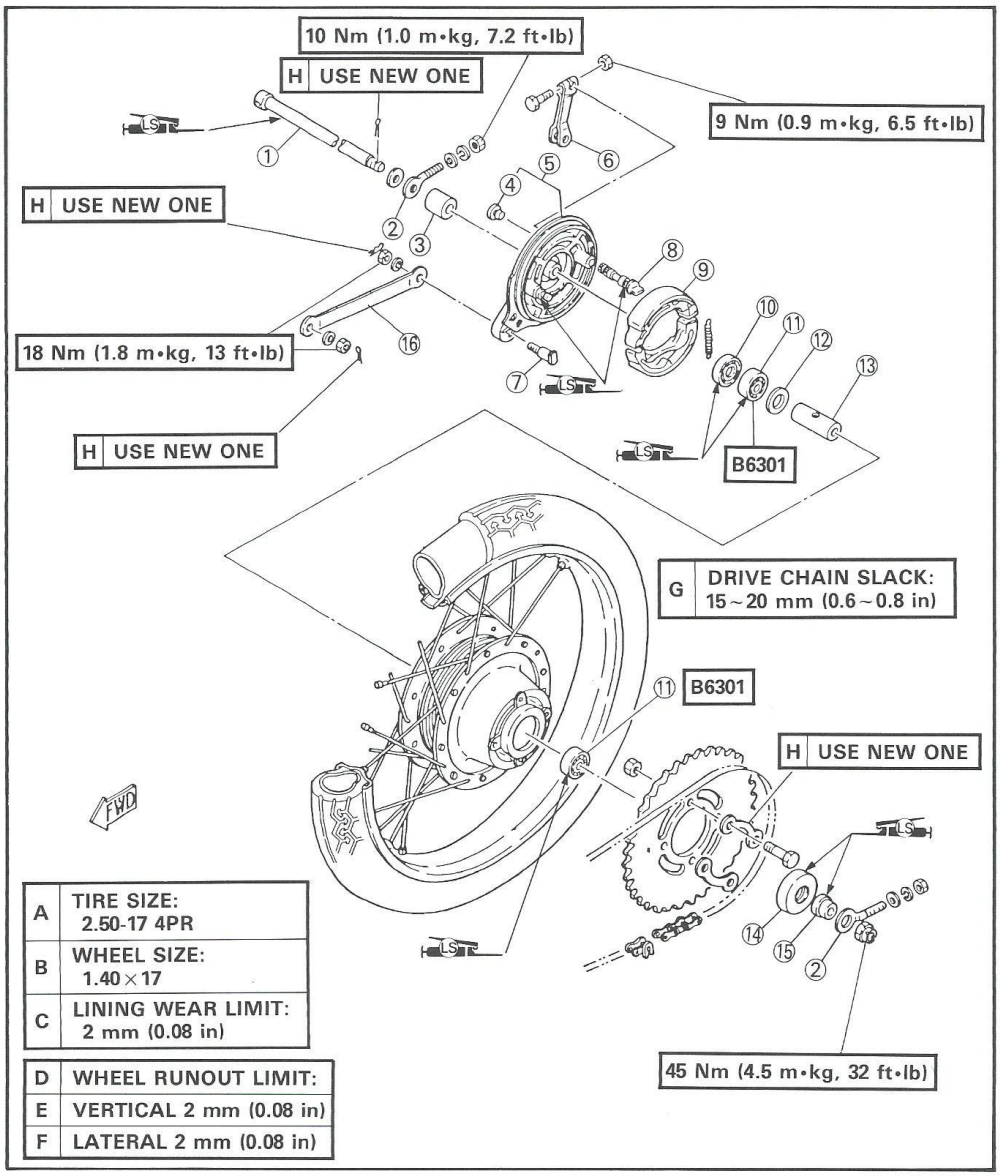

FRONT FORK

① Cap bolt
② Plain washer
③ O-ring
④ Guide cover
⑤ Gasket
⑥ Outer cover
⑦ Spring seat
⑧ Front fork boot
⑨ Spring
⑩ Spring seat
⑪ Circlip
⑫ Plain washer
⑬ Oil seal
⑭ Slide bush
⑮ Inner tube
⑯ Outer tube

A	FORK OIL:
B	CAPACITY (EACH LEG): 160 cm^3 (5.64 Imp oz, 5.41 US oz)
C	TYPE: Fork oil 10W or Equivalent
D	SPRING FREE LENGTH LIMIT: 151 mm (5.94 in)

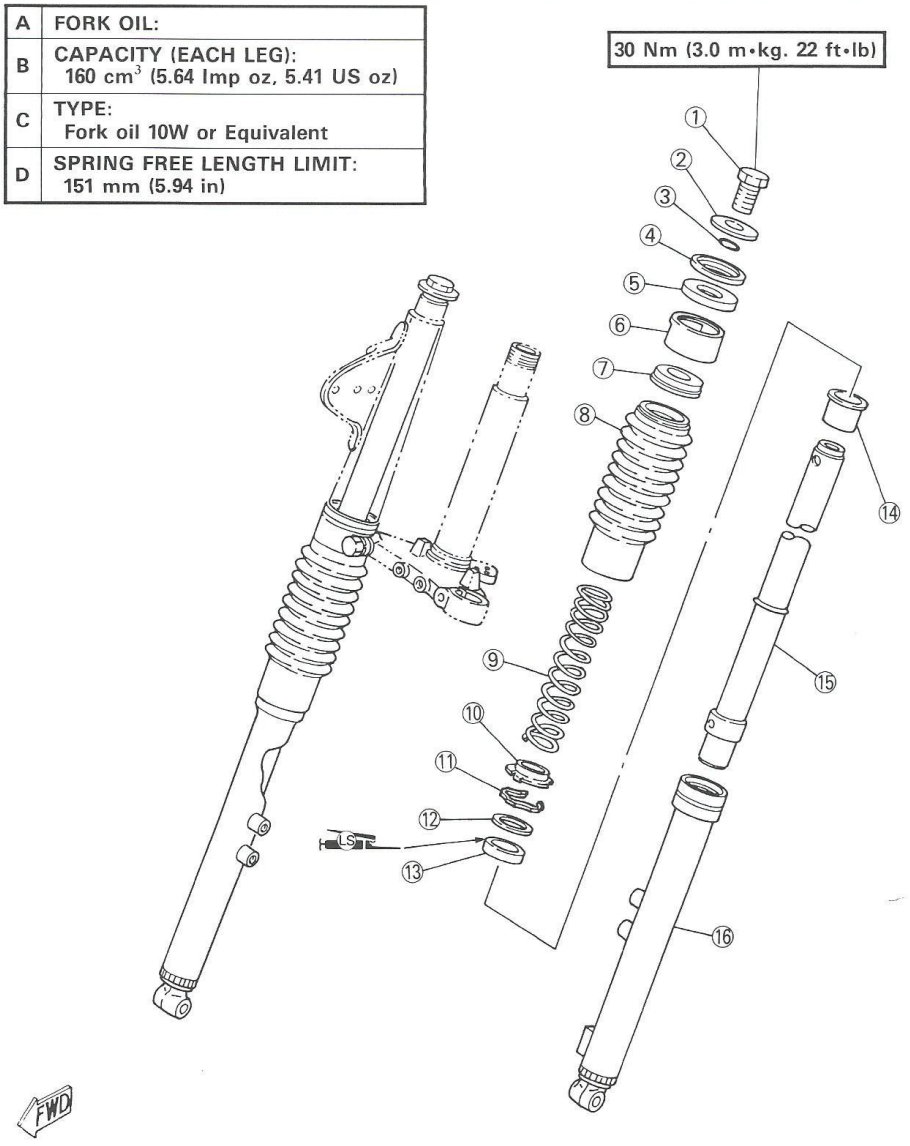

FRONT FORK

① Cap bolt
② Plain washer
③ O-ring
④ Guide cover
⑤ Gasket
⑥ Outer cover
⑦ Spring seat
⑧ Front fork boot
⑨ Spring
⑩ Spring seat
⑪ Circlip
⑫ Plain washer
⑬ Oil seal
⑭ Slide bush
⑮ Inner tube
⑯ Outer tube

A	FORK OIL:
B	CAPACITY (EACH LEG): 160 cm^3 (5.64 Imp oz, 5.41 US oz)
C	TYPE: Fork oil 10W or Equivalent
D	SPRING FREE LENGTH LIMIT: 151 mm (5.94 in)

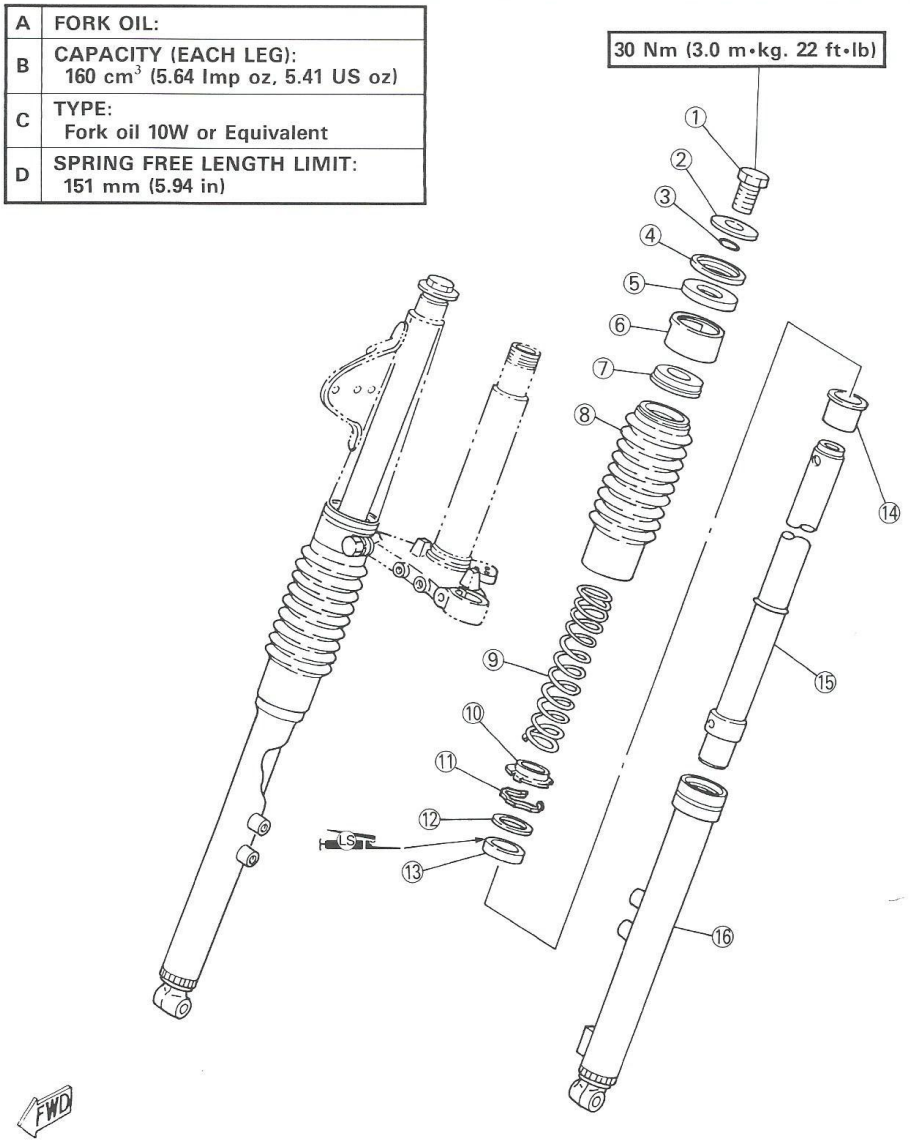

STEERING HEAD AND HANDLEBAR

① Handlebar
② Handlebar upper bracket
③ Handlebar lower bracket
④ Handlebar crown
⑤ Ring nut
⑥ Ball race cover
⑦ Bearing race (Upper)
⑧ Ball bearing
⑨ Bearing race (Lower)
⑩ Steering stem
⑪ Steering lock
⑫ Headlight stay

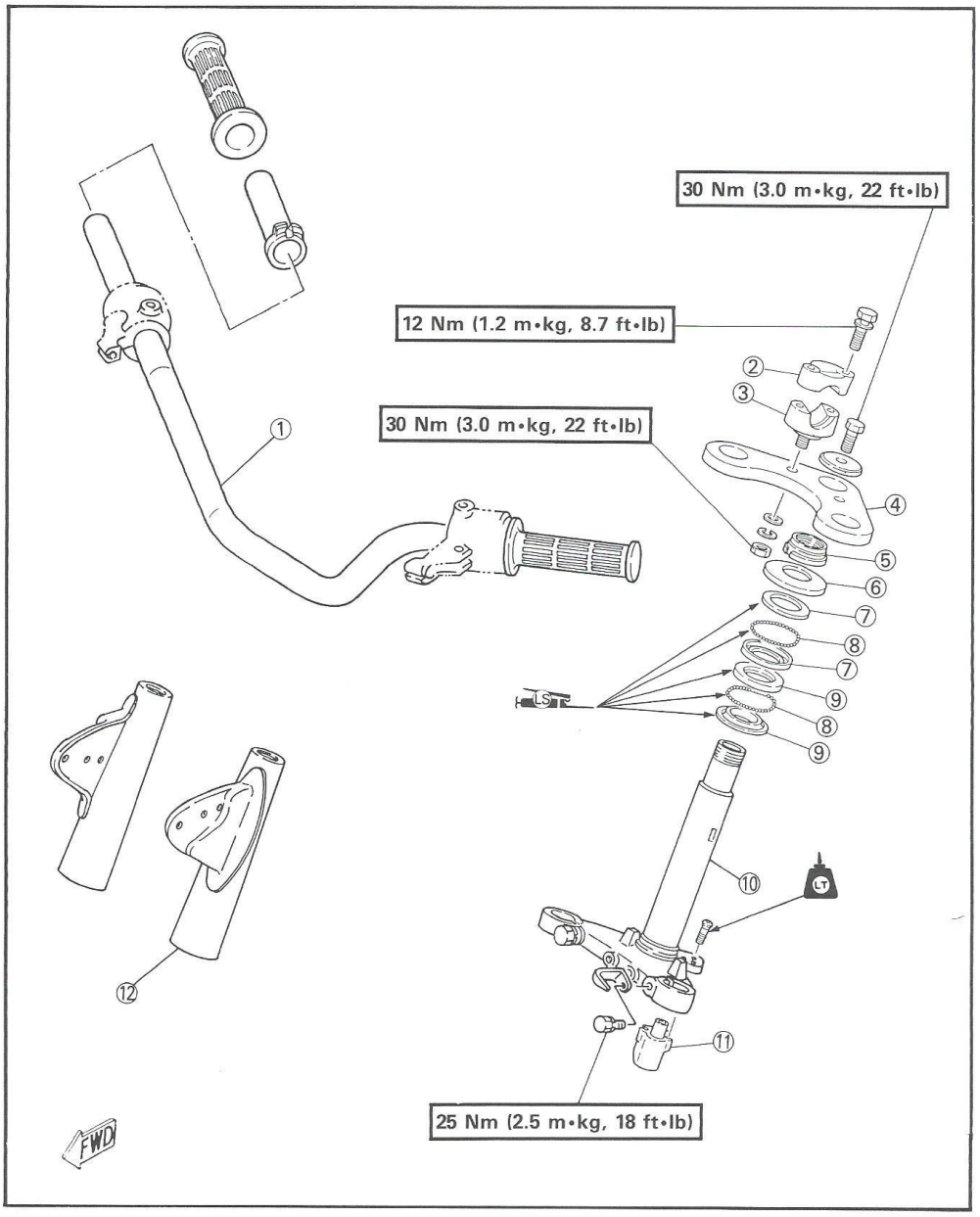

REAR SHOCK ABSORBER AND SWINGARM

① Chain cover
② Thick washer
③ Rear shock absorber
④ Swingarm
⑤ Bush
⑥ Pivot shaft

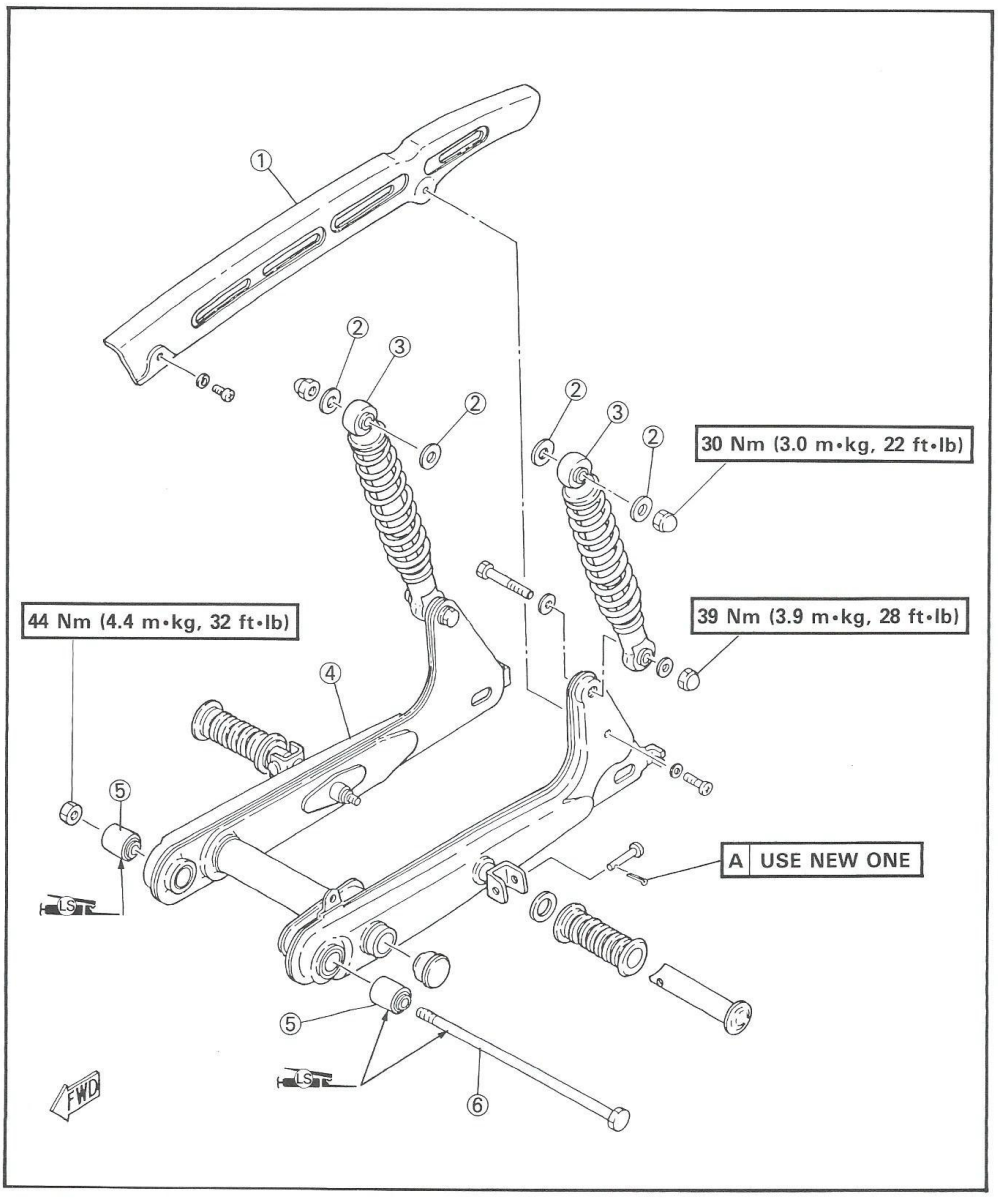

ELECTRICAL COMPONENTS

① Wireharness
② Main switch
③ Ignition coil
④ Spark plug cap
⑤ Diode
⑥ Reserve fuse
⑦ Main fuse
⑧ Battery

SPECIFICATIONS	RESISTANCE
IGNITION COIL:	
PRIMARY	1.4～1.8Ω
SECONDARY	6.0～7.3kΩ
SPARK PLUG CAP:	5kΩ

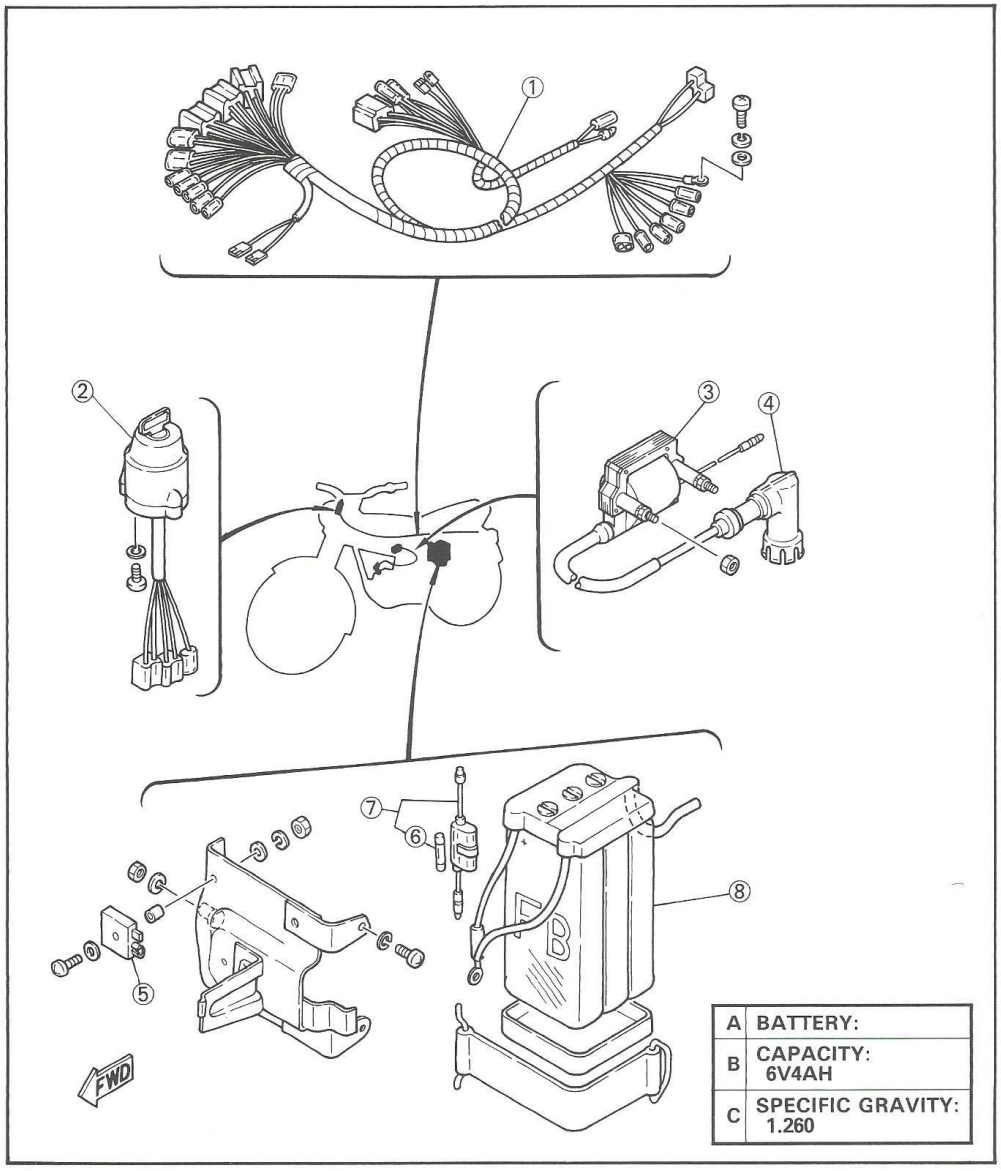

ELECTRICAL COMPONENTS

ELEC

① Horn (Except for Holland)
② Front brake switch
③ Flasher relay
④ Rear brake switch
⑤ Neutral switch
⑥ Contact breaker assembly
⑦ Condenser
⑧ Charging coil
⑨ Source coil
⑩ Rotor assembly

SPECIFICATIONS	RESISTANCE
SOURCE COIL: BLACK—BLACK/WHITE	1.4～2.0Ω
CHARGING COIL: BLACK—YELLOW BLACK—GREEN/RED	0.4～0.6Ω 0.3～0.5Ω

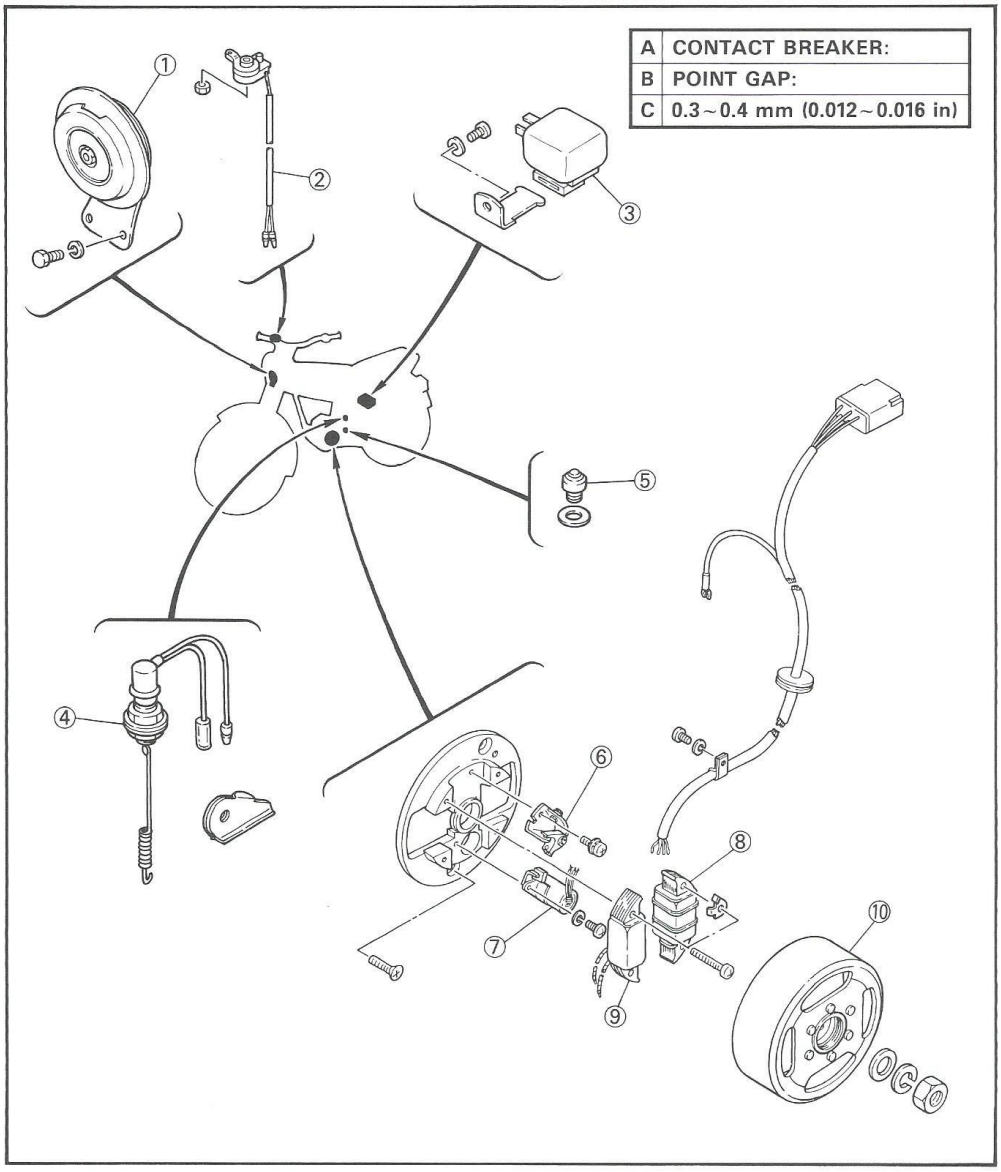

CABLE ROUTING

① Lever holder (Right)
② Brake cable
③ Meter bracket
④ Lever holder (Left)
⑤ Clutch cable
⑥ Handlebar switch (Left) lead
⑦ Handlebar switch (Right) lead
⑧ Speedometer cable
⑨ Clamp
⑩ Front brake switch lead
⑪ Band

Ⓐ Pass between meter bracket and handlebar.

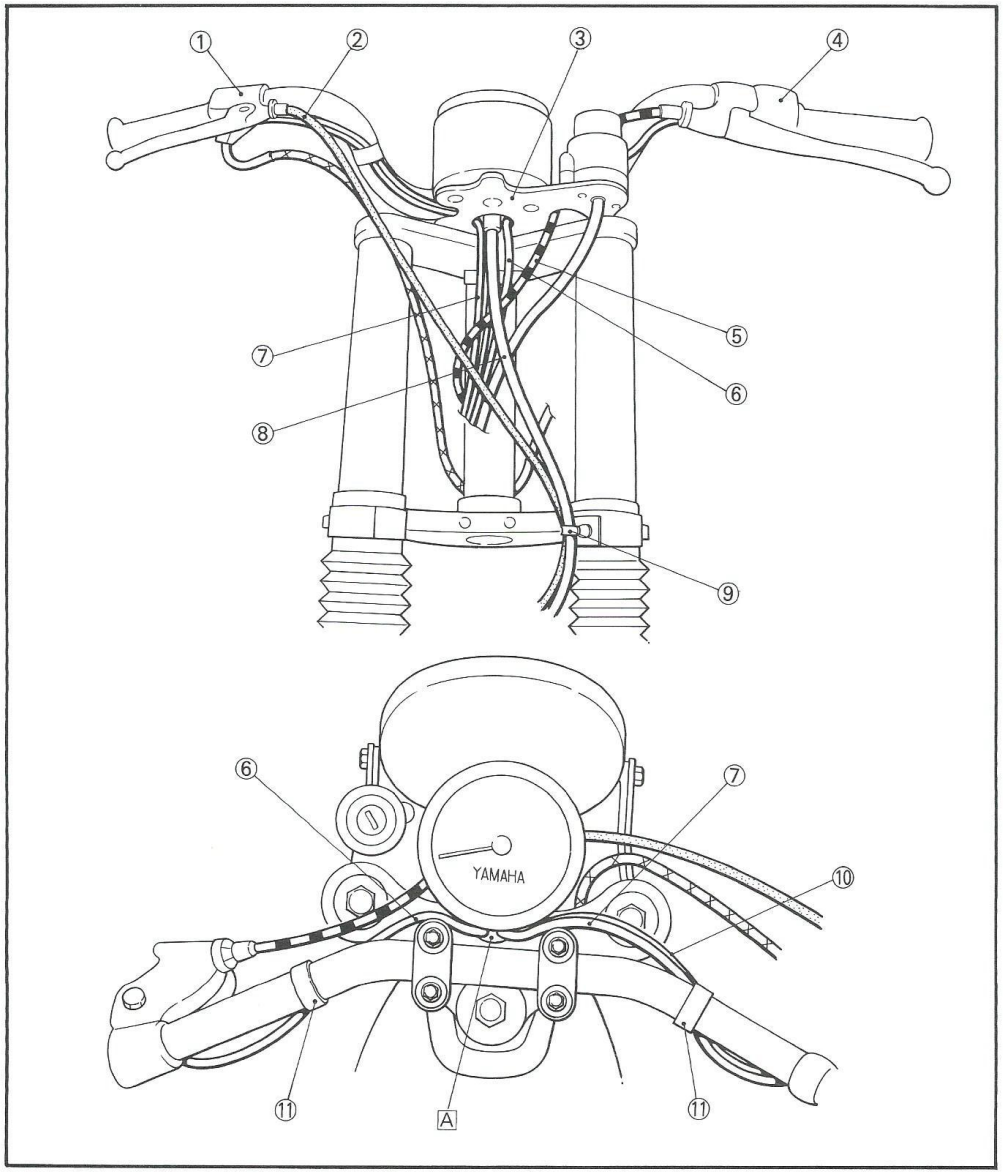

CABLE ROUTING

① Speedometer assembly
② Main switch
③ Headlight unit assembly
④ Wireharness
⑤ Clutch cable
⑥ Air cleaner case
⑦ Band
⑧ Spark plug lead
⑨ Brake cable
⑩ Speedometer cable
⑪ Clamp
⑫ Fuel hose

A For Belgium and England
B Pass through downtube stay

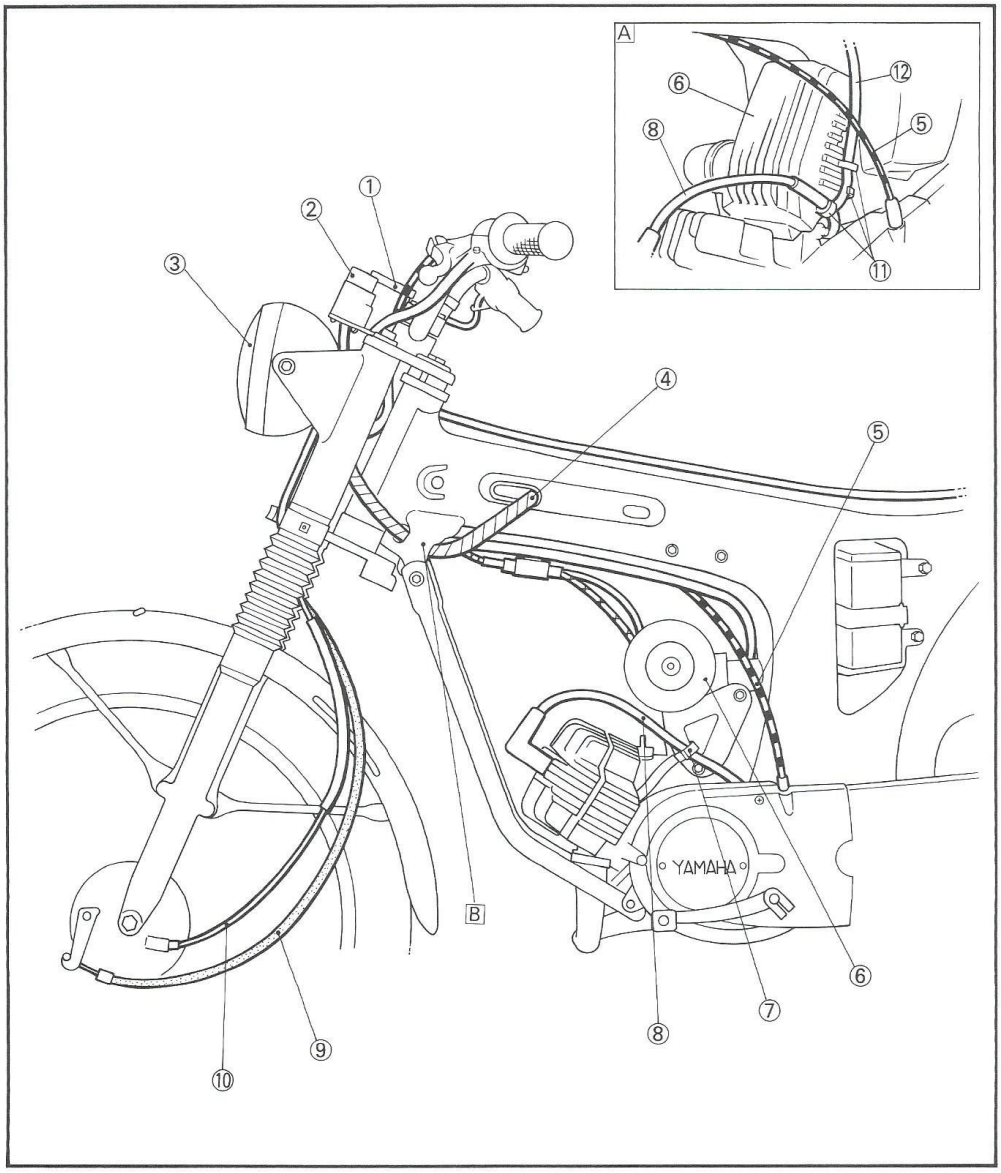

CABLE ROUTING

① Band
② Throttle cable 2
③ Oil pump cable
④ Clutch cable
⑤ Fuel hose
⑥ Throttle cable 1
⑦ Vacuum hose (Carburetor)
⑧ Oil hose

[A] Fit wire cylinder on to frame tab.

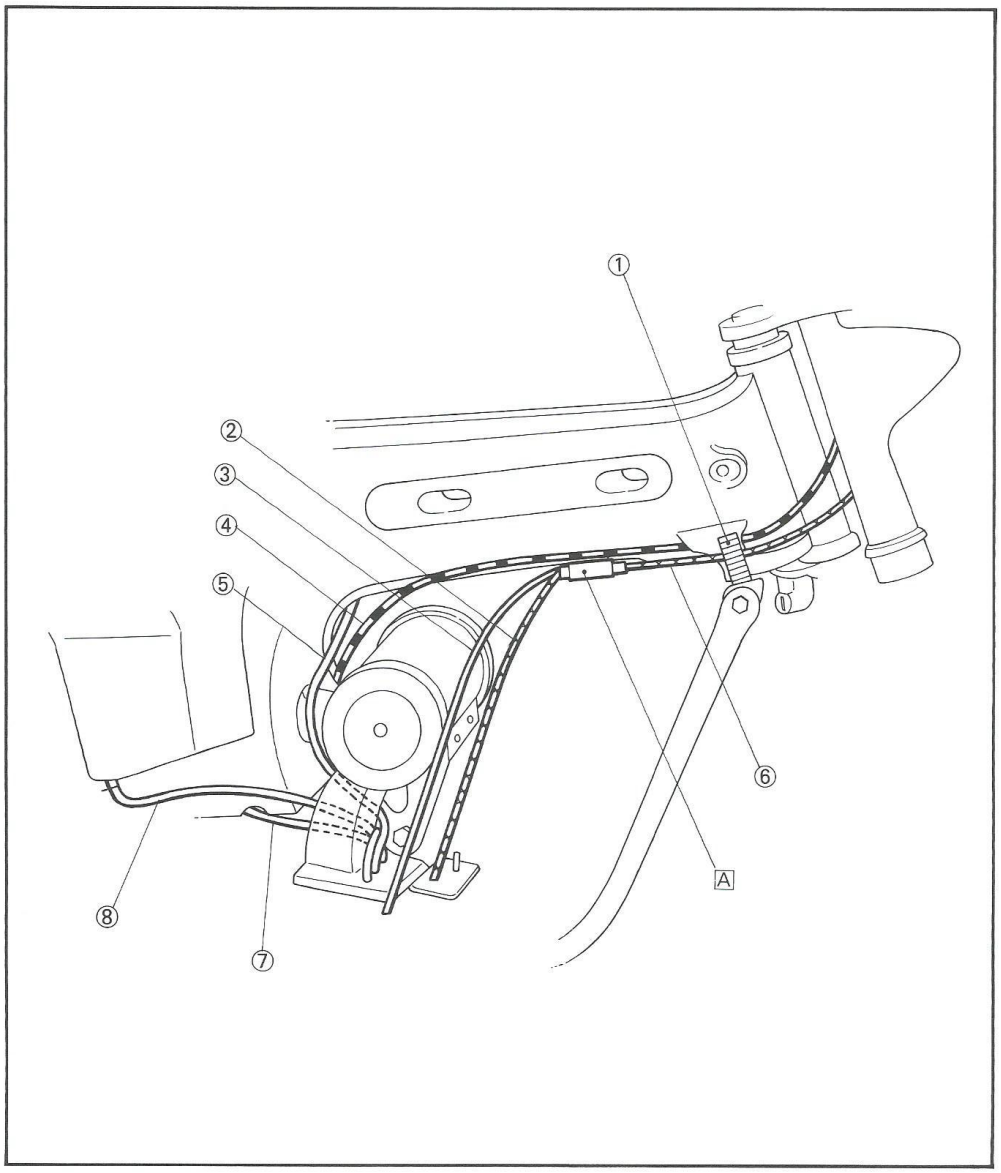

CABLE ROUTING

① Negative lead (Wireharness)
② Negative lead (Battery)
③ Positive lead (Battery)
④ Fuel hose
⑤ Battery
⑥ Fuse holder

A Install terminal (Negative) over battery.
B Secure battery lead (Positive) underneath battery band.
C Pass fuel hose back of clutch cable.
D Pass battery breather hose through frame and between frame-cross-tube and rear-arm-cross-member.

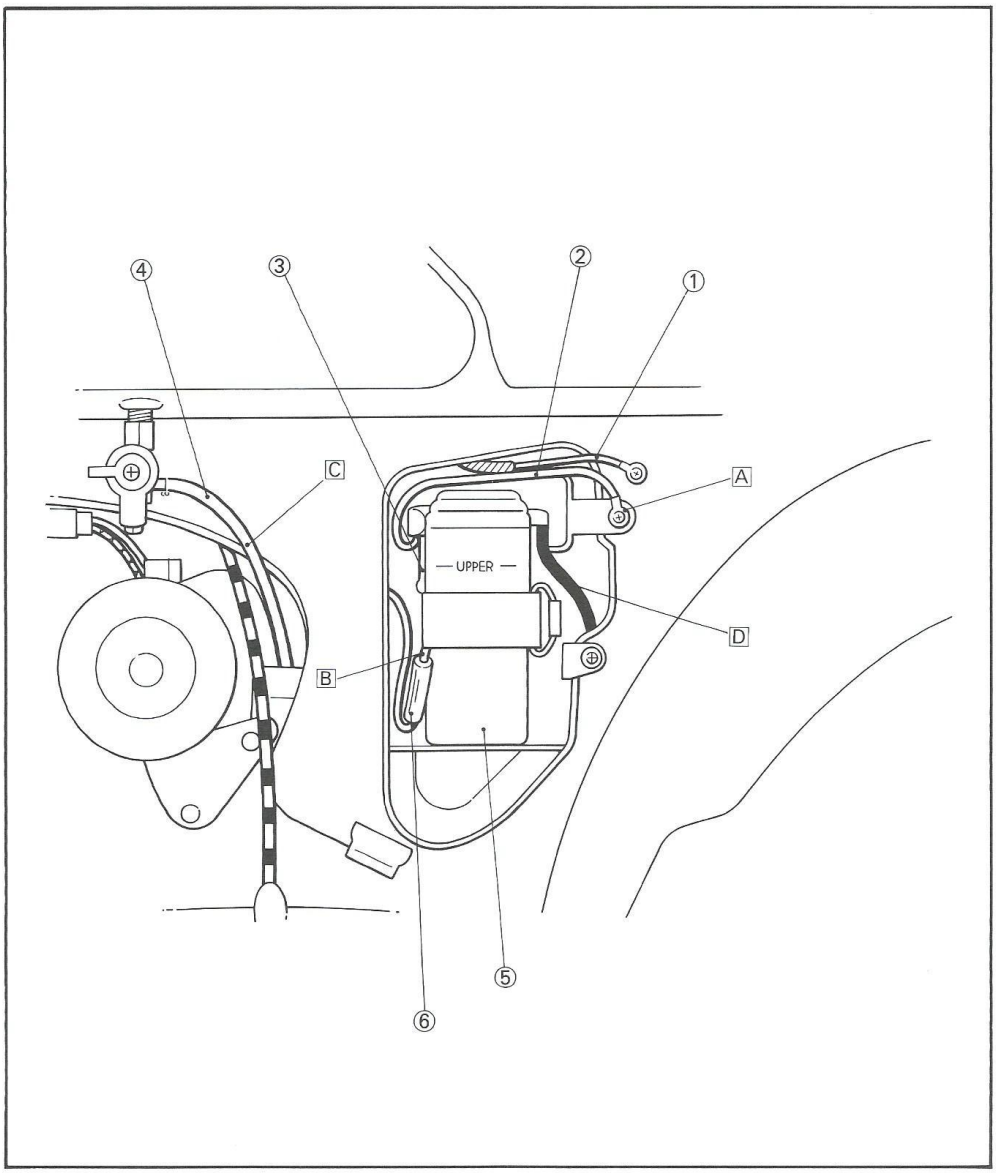

SPECIFICATIONS

GENERAL SPECIFICATIONS

(H): For Holland (B): For Belgium
(E): For England

Model	FS-1
Model Code Number:	2RU (H), 2RT (B), 2RV (E)
Frame Serial Number: Engine Serial Number:	2RU-000101 (H) 2RT-000101 (B) 3F6-105101 (E)
Dimensions: Overall Length Overall Width Overall Height Seat Height Wheelbase Minimum Ground Clearance	 1,770 mm (69.7 in) (H)(B), 1,825 mm (71.9 in) (E) 750 mm (29.5 in) 1,015 mm (40.0 in) 780 mm (30.7 in) 1,160 mm (45.7 in) 145 mm (5.7 in)
Basic Weight: With Oil and Full Fuel Tank	 81 kg (179 lb) (H)(B), 82 kg (181 lb) (E)
Minimum Turning Radius:	1,900 mm (74.8 in)
Engine: Engine Type Induction System Cylinder Arrangement Displacement Bore × Stroke Compression Ratio Starting System	 Air cooled 2-stroke Rotary valve Forward inclined single cylinder 49 cm^3 40.0 × 39.7 mm (1.57 × 1.56 in) 5.8 : 1 Kick starter
Lubrication System: Type Engine Oil Type Transmission Oil Type	 Separate lubrication (Yamaha Autolube) Yamaha oil 2T or equivalent Air cooled 2-stroke engine oil SAE 10W30 type SE motor oil
Oil Capacity: Engine Oil (Oil Tank) Transmission Oil: Periodic Oil Change Total Amount	 1.4 L (1.2 Imp qt, 1.5 US qt) 0.60 L (0.53 Imp qt, 0.63 US qt) 0.65 L (0.57 Imp qt, 0.69 US qt)
Air Filter: Type	 Wet element (H), Dry element (B)(E)

GENERAL SPECIFICATIONS

SPEC

Model	FS-1	
Fuel:		
Type	Regular gasoline	
Fuel Tank Capacity:		
Full Amount	9.0 L (2.0 Imp gal, 2.4 US gal)	
Reserve Amount	0.4 L (0.09 Imp gal, 0.1 US gal)	
Carburetor:		
Type/Quantity	VM10SC/1 (H), VM16SC/1 (B)(E)	
Manufacturer	MIKUNI	
Spark Plug:		
Type/Quantity	BR-6HS (H), BR-7HS (B)(E)	
Manufacturer	NGK	
Plug Gap	0.6~0.7 mm (0.02~0.03 in)	
Clutch:		
Type	Wet, multiple disc	
Transmission:		
Type	Constant mesh 4-speed	
Primary Reduction System	Helical gear	
Primary Reduction Ratio	74/19 (3.895)	
Secondary Reduction System	Chain drive	
Secondary Reduction Ratio	45/12 (3.750) (H), 39/12 (3.250) (B), 39/13 (3.000) (E)	
Operation	Left foot operation	
Gear Ratio:		
1st	40/13 (3.077)	
2nd	34/18 (1.889)	
3rd	30/23 (1.304)	
4th	27/26 (1.038)	
Chassis:		
Frame Type	Pressed backbone	
Caster Angle	26.5°	
Trail	80 mm (3.1 in)	
Tire:		
Type	With tube	
Size:		
Front	2.50-17 4PR	
Rear	2.50-17 4PR	
Tire Pressure:	Front	Rear
	250 kPa (2.5 kg/cm^2, 36 psi)	250 kPa (2.5 kg/cm^2, 36 psi)

GENERAL SPECIFICATIONS

Model	FS-1
Brake:	
Front Brake Type	Drum brake
Front Brake Operation	Right hand operation
Rear Brake Type	Drum brake
Rear Brake Operation	Right foot operation
Suspension:	
Front Suspension Type	Telescopic fork
Rear Suspension Type	Swingarm
Shock Absorber:	
Front Shock Absorber	Coil spring/Oil damper
Rear Shock Absorber	Coil spring/Oil damper
Wheel Travel:	
Front Wheel Travel	85 mm (3.3 in)
Rear Wheel Travel	67 mm (2.6 in)
Electrical:	
Ignition System	Flywheel magneto
Generator System	Flywheel magneto
Battery:	
Type	6N4A-4D
Capacity	6V4AH
Headlight:	
Type	Bulb
Bulb Wattage (Quantity):	
Headlight	6V 15W/15W (H)(B), 6V 18W/18W (E) (1 pc.)
Tail/Brake Light	6V 2W/5W (H), 6V 5.3W/17W (B) 6V 5W/21W (E) (1 pc.)
Flasher Light	6V 10W (H)(B), 6V 21W (E) (4 pcs.)
Meter Light	6V 3W (1 pc.)
"NEUTRAL" Indicator Light	6V 3W (1 pc.)
"HIGH BEAM" Indicator Light (England only)	6V 3W (1 pc.)
"TURN" Indicator Light (England only)	6V 3W (1 pc.)

MAINTENANCE SPECIFICATIONS

ENGINE

Model	FS-1
Cylinder Head: Warpage Limit 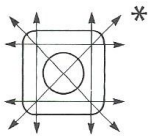	0.03 mm (0.0012 in) *Lines indicate straightedge measurement.
Cylinder: Bore Size Taper Limit Out of Round Limit	 40.00 ~ 40.02 mm (1.575 ~ 1.576 in) 0.05 mm (0.002 in) 0.01 mm (0.0004 in)
Piston: Piston Size "D" Measuring Point "a" 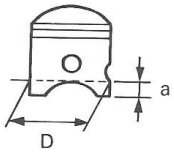 Piston Off-Set Piston-to-Cylinder Clearance <Limit> Over Size 1st Over Size 2nd	 39.96 ~ 39.98 mm (1.573 ~ 1.574 in) 10 mm (0.4 in) 0.2 mm (0.008 in) 0.035 ~ 0.040 mm (0.0014 ~ 0.0016 in) <0.1 mm (0.004 in)> 40.25 mm (1.58 in) 40.50 mm (1.59 in)
Piston Ring: Sectional Sketch — Top Ring 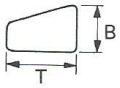 2nd Ring 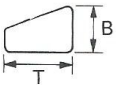 End Gap (Installed) — Top Ring 2nd Ring Side Clearance — Top Ring 2nd Ring	 Keystone type B = 1.5 mm (0.06 in) T = 1.8 mm (0.07 in) Keystone type B = 1.5 mm (0.06 in) T = 1.8 mm (0.07 in) 0.15 ~ 0.35 mm (0.006 ~ 0.014 in) 0.15 ~ 0.35 mm (0.006 ~ 0.014 in) 0.03 ~ 0.08 mm (0.001 ~ 0.003 in) 0.03 ~ 0.08 mm (0.001 ~ 0.003 in)

MAINTENANCE SPECIFICATIONS

ENGINE

Model	FS-1
Cylinder Head: Warpage Limit 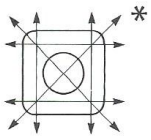	0.03 mm (0.0012 in) *Lines indicate straightedge measurement.
Cylinder: Bore Size Taper Limit Out of Round Limit	 40.00 ~ 40.02 mm (1.575 ~ 1.576 in) 0.05 mm (0.002 in) 0.01 mm (0.0004 in)
Piston: Piston Size "D" Measuring Point "a" 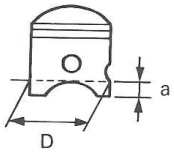 Piston Off-Set Piston-to-Cylinder Clearance <Limit> Over Size 1st Over Size 2nd	 39.96 ~ 39.98 mm (1.573 ~ 1.574 in) 10 mm (0.4 in) 0.2 mm (0.008 in) 0.035 ~ 0.040 mm (0.0014 ~ 0.0016 in) <0.1 mm (0.004 in)> 40.25 mm (1.58 in) 40.50 mm (1.59 in)
Piston Ring: Sectional Sketch — Top Ring 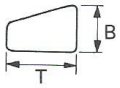 2nd Ring 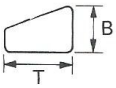 End Gap (Installed) — Top Ring 2nd Ring Side Clearance — Top Ring 2nd Ring	 Keystone type B = 1.5 mm (0.06 in) T = 1.8 mm (0.07 in) Keystone type B = 1.5 mm (0.06 in) T = 1.8 mm (0.07 in) 0.15 ~ 0.35 mm (0.006 ~ 0.014 in) 0.15 ~ 0.35 mm (0.006 ~ 0.014 in) 0.03 ~ 0.08 mm (0.001 ~ 0.003 in) 0.03 ~ 0.08 mm (0.001 ~ 0.003 in)

MAINTENANCE SPECIFICATIONS

SPEC

Model	FS-1
Crankshaft:	
Crank Width "A"	37.90～37.95 mm (1.492～1.494 in)
Runout Limit "C"	0.03 mm (0.0012 in)
Big End Side Clearance "D"	0.2～0.7 mm (0.008～0.028 in)
Small End Free Play "F"	0.8～1.0 mm (0.03～0.04 in)
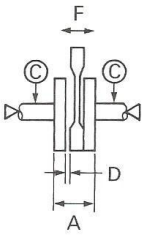	
Clutch:	
Friction Plate:	
Thickness	3.5 mm (0.14 in)
Quantity	2 pcs.
Wear Limit	3.2 mm (0.13 in)
Clutch Plate:	
Thickness	1.6 mm (0.06 in)
Quantity	1 pcs.
Warpage Limit	0.05 mm (0.002 in)
Clutch Spring:	
Free Length	34.0 mm (1.34 in)
Quantity	4 pcs.
Minimum Free Length	31.0 mm (1.22 in)
Clutch Release Method	Inner push, Screw push
Transmission:	
Main Axle Runout Limit	0.08 mm (0.003 in)
Drive Axle Runout Limit	0.08 mm (0.003 in)
Shifter:	
Type	Guide bar
Guide Bar Bending Limit	0.03 mm (0.001 in)
Kick Starter:	
Type	Kick & mesh type
Air Filter:	
Oil Grade (Holland only)	SAE 10W30 motor oil

MAINTENANCE SPECIFICATIONS

SPEC

Model		FS-1	
Carburetor:		Holland	Belgium, England
I.D. Mark		2RU 00	3F6 00
Main Jet	(M.J.)	#78	#150
Air Jet	(A.J.)	ϕ2.3	ϕ0.5
Jet Needle-Position	(J.N.)	3E11-4	3G9-3
Needle Jet	(N.J.)	E-4	←
Cutaway	(C.A.)	2.5	1.5
Pilot Outlet	(P.O.)	ϕ0.9	←
Pilot Jet	(P.J.)	#25	←
Air Screw	(A.S.)	1～1 1/2	1 1/2～2
Valve Seat Size	(V.S.)	ϕ1.2	←
Starter Jet	(G.S.)	#35	←
Idling Speed		1,250～1,350 r/min	←
Rotaly Valve:			
Valve Thickness		3.0 mm (0.12 in)	
Disc Outside Diameter		100.0 mm (4 in)	
Lubrication System:			
Autolube Pump:			
Color Code		Dark blue	
Minimum Stroke		0.20～0.25 mm (0.008～0.010 in)	
Maximum Stroke		1.45～1.70 mm (0.057～0.067 in)	
Pulley Adjusting Mark		Auto adjuster	

MAINTENANCE SPECIFICATIONS

SPEC

Tightening Torque:

Part to be tightened	Q'ty	Thread size	Tightening torque			Remarks
			Nm	m•kg	ft•lb	
Cylinder head nut	4	M6	10	1.0	7.2	
Spark plug	1	M14	25	2.5	18	
Cylinder stud bolt	4	M6	10	1.0	7.2	
Crankcase cover (Right-Front) screw	4	M6	8	0.8	5.8	
Autolube pump screw	2	M5	8	0.8	5.8	
Kick crank bolt	1	M6	12	1.2	2.6	
Crankcase cover (Right) screw	7	M6	8	0.8	5.8	
Primary drive gear nut	1	M12	45	4.5	32	
Clutch spring holding screw	4	M5	6	0.6	4.3	
Clutch housing nut	1	M12	45	4.5	32	
Crankcase cover (Left)	5	M6	8	0.8	5.8	
Shift pedal bolt	1	M6	10	1.0	7.2	
Flywheel magneto nut	1	M12	45	4.5	32	
Stater assembly screw	2	M5	7	0.7	5.1	
Rotary valve cover screw	6	M6	8	0.8	5.8	
Bearing stopper plate screw	2	M6	8	0.8	5.8	
Securing bolt (Stopper lever)	1	M6	14	1.4	10	
Crankcase screw	11	M6	8	0.8	5.8	
Neutral switch	1	M12	20	2.0	14	
Drain bolt	1	M12	20	2.0	14	
Exhaust pipe ring nut	1	M42	45	4.5	32	

MAINTENANCE SPECIFICATIONS

SPEC

Tightening Torque:

Part to be tightened	Q'ty	Thread size	Tightening torque			Remarks
			Nm	m•kg	ft•lb	
Cylinder head nut	4	M6	10	1.0	7.2	
Spark plug	1	M14	25	2.5	18	
Cylinder stud bolt	4	M6	10	1.0	7.2	
Crankcase cover (Right-Front) screw	4	M6	8	0.8	5.8	
Autolube pump screw	2	M5	8	0.8	5.8	
Kick crank bolt	1	M6	12	1.2	2.6	
Crankcase cover (Right) screw	7	M6	8	0.8	5.8	
Primary drive gear nut	1	M12	45	4.5	32	
Clutch spring holding screw	4	M5	6	0.6	4.3	
Clutch housing nut	1	M12	45	4.5	32	
Crankcase cover (Left)	5	M6	8	0.8	5.8	
Shift pedal bolt	1	M6	10	1.0	7.2	
Flywheel magneto nut	1	M12	45	4.5	32	
Stater assembly screw	2	M5	7	0.7	5.1	
Rotary valve cover screw	6	M6	8	0.8	5.8	
Bearing stopper plate screw	2	M6	8	0.8	5.8	
Securing bolt (Stopper lever)	1	M6	14	1.4	10	
Crankcase screw	11	M6	8	0.8	5.8	
Neutral switch	1	M12	20	2.0	14	
Drain bolt	1	M12	20	2.0	14	
Exhaust pipe ring nut	1	M42	45	4.5	32	

CHASSIS

Model	FS-1
Steering System:	
Bearing Type	Ball bearing
Bearing Size (Quantity):	
Upper	1/4 in (19 pcs.)
Lower	1/4 in (19 pcs.)
Front Suspension:	
Front Fork Travel	85 mm (3.35 in)
Fork Spring Free Length	153 mm (6.02 in)
<Limit>	<151 mm (5.94 in)>
Spring Rate (K_1)	4.51 N/mm (0.46 kg/mm, 25.8 lb/in)
Stroke (K_1)	0~85 mm (0~3.35 in)
Optional Spring	No.
Oil Capacity	160 cm^3 (5.64 Imp oz, 5.41 US oz)
Oil Grade	Fork oil 10W or equivalent
Rear Suspension:	
Shock Absorber Travel	65 mm (2.56 in)
Spring Free Length	211.5 mm (8.33 in)
Spring Rate (K_1)	27.9 N/mm (2.85 kg/mm, 160 lb/in)
Stroke (K_1)	0~65 mm (0~2.56 in)
Optional Spring	No.
Swingarm:	
Free Play Limit (Swingarm end)	1.0 mm (0.04 in) Move swingarm end side to side
Front Wheel:	
Type	Spoke wheel
Rim Size	1.20×17
Rim Material	Steel
Rim Runout Limit:	
Vertical	2.0 mm (0.08 in)
Lateral	2.0 mm (0.08 in)
Rear Wheel:	
Type	Spoke wheel
Rim Size	1.40×17
Rim Material	Steel
Rim Runout Limit:	
Vertical	2.0 mm (0.08 in)
Lateral	2.0 mm (0.08 in)

MAINTENANCE SPECIFICATIONS

SPEC

Model	FS-1
Drive Chain:	
Type/Manufacturer	420/DAIDO
Number of Links	100 Links (H), 96 Links (B)(E)
Chain Free Play	15~20 mm (0.6~0.8 in)
Front Drum Brake:	
Type	Leading, trailing
Brake Drum Inside Dia	110 mm (4.33 in)
<Wear Limit>	<111 mm (4.37 in)>
Lining Thickness	4 mm (0.16 in)
<Wear Limit>	<2 mm (0.08 in)>
Shoe Spring Free Length	34.5 mm (1.36 in)
Rear Drum Brake:	
Type	Leading, trailing
Brake Drum Inside Dia	110 mm (4.33 in)
<Wear Limit>	<111 mm (4.37 in)>
Lining Thickness	4 mm (0.16 in)
<Wear Limit>	<2 mm (0.08 in)>
Shoe Spring Free Length	34.5 mm (1.36 in)
Brake Lever and Brake Pedal:	
Brake Lever Free Play	5~8 mm (0.20~0.32 in) At lever pivot side
Brake Pedal Position	15 mm (0.60 in)
Brake Pedal Free Play	20~30 mm (0.8~1.2 in)
Clutch Lever and Throttle Grip	
Clutch Lever Free Play	2~3 mm (0.08~0.12 in) At lever pivot side
Throttle Cable Free Play	2~5 mm (0.08~0.20 n) At grip flange

Tightening Torque:

Part to be tightened	Thread size	Tightening torque			Remarks
		Nm	m•kg	ft•lb	
Engine mount					
[Rear, upper]	M8 ×1.25	24	2.4	17	
[Rear, lower]	M8 ×1.25	24	2.4	17	
[Upper]	M8 ×1.25	24	2.4	17	
[Downtube upper]	M8 ×1.25	24	2.4	17	
[Downtube lower]	M8 ×1.25	24	2.4	17	
Pivot shaft and nut	M10×1.25	44	4.4	32	
Rear shock and frame	M10×1.25	30	3.0	22	
Rear shock and rear arm	M10×1.25	39	3.9	28	
Ring nut (Steering shaft)	M25×1.0				Refer to "NOTE"
Cap bolt (Front fork)	M10×1.25	30	3.0	22	
Handlebar crown and steering shaft	M10×1.25	30	3.0	22	
Handlebar crown and handlebar lower bracket	M10×1.25	30	3.0	22	
Handlebar upper bracket and handlebar lower bracket	M6 ×1.0	12	1.2	8.7	
Inner tube pinch bolt	M10×1.25	25	2.5	18	
Front wheel axle	M10×1.25	44	4.4	32	
Rear wheel axle	M10×1.25	45	4.5	32	
Driven sprocket and wheel hub	M8 ×1.25	24	2.4	17	
Tension bar and brake shoe plate	M8 ×1.25	18	1.8	13	
Tension bar and rear arm	M8 ×1.25	18	1.8	13	
Camshaft lever (Brake)	M6 ×1.0	9	0.9	6.5	
Frame and footrest	M8 ×1.25	24	2.4	17	
Frame and seat	M8 ×1.25	10	1.0	7.2	
Chain puller nut	M6 ×1.0	10	1.0	7.2	

NOTE:

Tighten the ring nut so all free play is taken up, but so the steering stem can still pivot freely from lock to lock. Recheck for free play after the entire fork unit has been installed.

ELECTRICAL

Model	FS-1
Voltage:	6V
Ignition System: Ignition Timing (B.T.D.C.) Advancer Type	 22° at 5,000 r/min Centrifugal type
Ignition: Magneto Model/Manufacturer Contact-Breaker-Point Gap Spring Pressure Condenser Capacity Source Coil Resistance	 F355/YAMAHA 0.3~0.4 mm (0.012~0.016 in) 600~800 g (21.162~28.216 oz) 0.27~0.33μF 1.4~2.0Ω at 20°C (68°F) (Black/White—Ground)
Ignition Coil: Model/Manufacturer Minimum Spark Gap Primary Coil Resistance Secondary Coil Resistance	 C481/YAMAHA 6 mm (0.24 in) 1.4~1.8Ω at 20°C (68°F) 6.0~7.3kΩ at 20°C (68°F)
Spark Plug Cap: Type Plug Cap Resistance	 Resin Type 5kΩ at 20°C (68°F)
Charging System: Type	 Flywheel Magneto
Flywheel Magneto: Magneto Model/Manufacturer Charging Current—Day (Min.) (Max.) Charging Current—Night (Min.) (Max.) Lighting Voltage (Min.) (Max.) Charging Coil Resistance	 F355/YAMAHA 0.7A or more at 3,000 r/min 4.7A or less at 8,000 r/min 0.35A or more at 3,000 r/min 2.5A or less at 8,000 r/min 5.8V or mare at 3,000 r/min 8.2V or less at 8,000 r/min 0.4~0.6Ω at 20°C (68°F) (Ground—Yellow) 0.3~0.5Ω at 20°C (68F°) (Ground—Green/Red)

MAINTENANCE SPECIFICATIONS

SPEC

Model	FS-1
[Reference date] 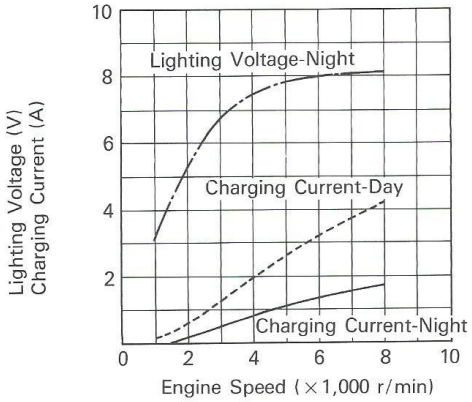	
Rectifier: Model/Manufacturer Capacity Withstand Voltage	 DE4504/STANLEY 4A 400V
Battery: Specific Gravity	 1.260
Horn: (Except for Holland) Type Quantity Model/Manufacturer Maximum Amperage	 Plane Type 1 pc. MF-6/NIKKO 1.5A
Flasher Relay: Type Model/Manufacturer Self Cancelling Device Flasher Frequency Wattage	 Condenser Type FZ618SD/NIPPON DENSO (H), FZ650SD/NIPPON DENSO (B)(E) No. 60～120 cycles/min 10W×2 (H)(B), 21W×2+3W (E)
Curcuit Breaker: Type	 Fuse
Curcuit (Fuse): Main Reserve	 10A (1 pc.) 10A (1 pc.)

GENERAL TORQUE SPECIFICATIONS

This chart specifies torque for standard fasteners with standard I.S.O. pitch threads. Torque specifications for special components or assemblies are included in the applicable sections of this book. To avoid warpage, tighten multi-fastener assemblies in a crisscross fashion, in progressive stages, until full torque is reached. Unless otherwise specified, torque specifications call for clean, dry threads. Components should be at room temperature.

A (Nut)	B (Bolt)	General torque specifications		
		Nm	m•kg	ft•lb
10 mm	6 mm	6	0.6	4.3
12 mm	8 mm	15	1.5	11
14 mm	10 mm	30	3.0	22
17 mm	12 mm	55	5.5	40
19 mm	14 mm	85	8.5	61
22 mm	16 mm	130	13.0	94

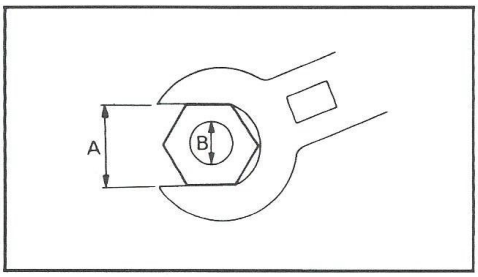

A: Distance across flats
B: Outside thread diameter

DEFINITION OF UNITS

Unit	Read	Definition	Measure
mm cm	millimeter centimeter	10^{-3} meter 10^{-2} meter	Length Length
kg	kilogram	10^{3} gram	Weight
N	Newton	1 kg × m/sec^2	Force
Nm m•kg	Newton meter Meter kilogram	N × m m × kg	Torque Torque
Pa N/mm	Pascal Newton per millimeter	N/m^2 N/mm	Pressure Spring rate
L cm^3	Liter Cubic centimeter	—	Volume or capacity
r/min	Rotation per minute	—	Engine speed

LUBRICATION POINTS AND LUBRICANT TYPE

ENGINE

Lubrication Points (Part name)	Lubricant Type
Oil seal lips (All)	TLS
O-rings (All)	TLS
Bearing retainer	E
Crankshaft bearings (Left and center)	E
Needle bearings (Connecting rod)	E
Main axle bearings	E
Drive axle bearings	E
Crank pins	E
Piston rings, piston pins and pistons	E
Warm shaft (Autolube pump)	E
Kick idle gear	M
Kick axle	E
Primary driven gear (Clutch housing)	E
Push rod	E
Push screw (Push lever)	TLS
Sliding gear (Transmission)	M
Free movement gear (Transmission)	M
Guide bar (Shift forks)	E
Crankcase mating surfaces	Yamaha bond No. 4

LUBRICATION POINTS AND LUBRICANT TYPE

SPEC

CHASSIS

Lubrication Points (Part name)	Lubricant Type
Ball bearings (Steering shaft)	SLS
Oil seal lips (Front wheel and rear wheel)	SLS
Pivoting point (Brake pedal)	SLS
Pivoting point (Centerstand)	SLS
Right handlebar end	SLS
Throttle cable end (Throttle grip)	SLS
Pivoting point (Clutch lever)	SLS
Clutch cable end (Clutch lever)	SLS
Pivoting point (Brake lever)	SLS
Pivot shaft (Swingarm)	SLS
Bushes (Swingarm)	SLS
Front wheel axle	SLS
Rear wheel axle	SLS
Collar (Front wheel)	SLS
Speedometer gear unit	SLS